Experiment No: 09

Experiment Name: Experiment on Frequency Modulation using coding and simulation in MATLAB software.

Objective: To learn about the process of Frequency Modulation by using MATLAB coding System and simulation.

Equipment: Computer, MATLAB software.

Frequency modulation is the process of the changing of frequency of the carrier signal in accordance with the instantaneous value/frequency of the message signal. The amplitude and phase of the signal are kept constant, but one can observe the fluctuations of frequency with respect to modulating signal.

Any study is more effective when it is explained in a theoretical method in addition to its practical, here you will learn theoretical as well as practical implementation on the MATLAB interface Which will make you more familiar with the concept of Frequency modulation.

Coding System of Frequency Modulation:

Program 1:

```
%E-241440
clc
clear all;
close all;
A=20;
fc=400;
fm=20;
t=0:0.0001:0.35;
mf=20;
c=sin(2*pi*fc*t);
m=sin(2*pi*fm*t);
v=A*sin(2*pi*fc*t+(mf*m));
subplot(3,1,1);
title('carrier signal');
plot(t,c);
grid on;
subplot(3,1,2);
title('message signal');
plot(t,m);
grid on;
subplot(3,1,3);
title('Fm signal');
plot(t,v);
grid on;
```

Figure 1: Source Code

Output:

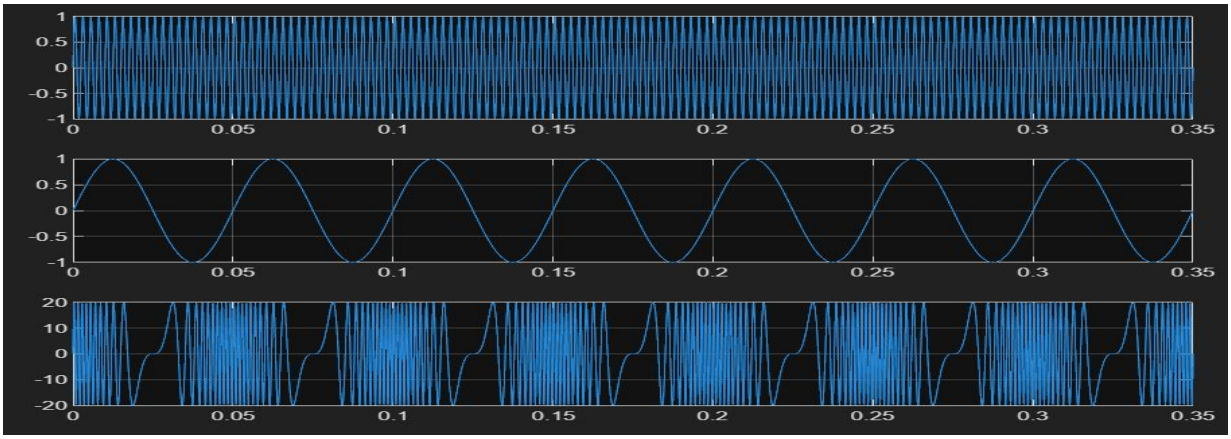

Figure 2:Frequency Modulation

Program 2:

```
%E-241440
clc
clear all;
close all;
%Set the sampling frequency to 1kHz and carrier frequency to 200 Hz.
fs = 1000;
fc = 200;
t = (0:1/fs:0.2)';
%Create two tone sinusoidal signal with frequencies 30 and 60 Hz.
x = sin(2*pi*30*t)+2*sin(2*pi*60*t);
%Set the frequency deviation to 50 Hz.
fDev = 50;
%Frequency modulate x.
y = fmmod(x,fc,fs,fDev);
%plot the graphs to show the original signal and modulated signal
subplot(2,1,1)
plot(t,x)
xlabel('Time(s)')
ylabel('Amplitude')
legend('original signal')
grid on;
subplot(2,1,2)
plot(t,y)
xlabel('Time(s)')
ylabel('Amplitude')
legend('modulated signal')
grid on;
```

Figure 3: Source Code

Output:

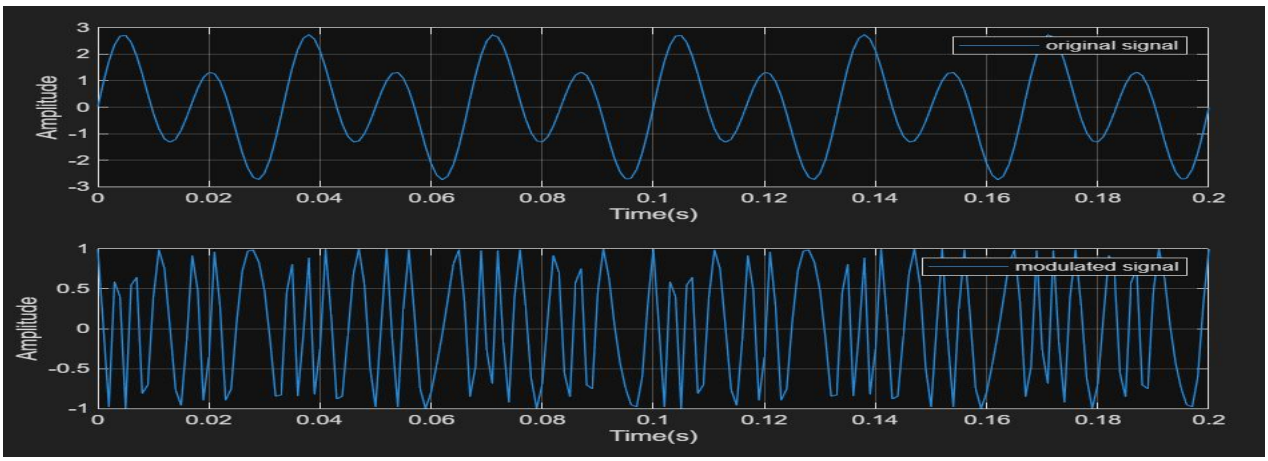

Figure 4: Frequency Modulation

Simulation System FM modulation is shown below:

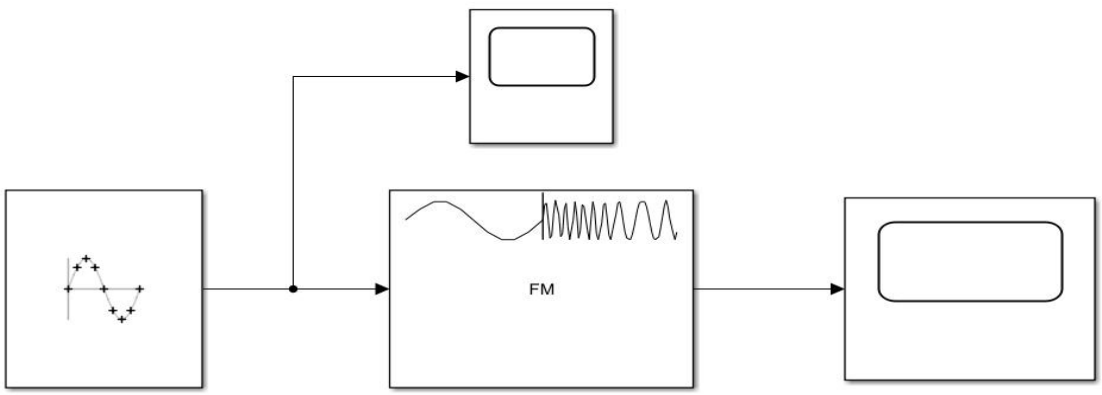

Figure 5: Simulation System

Parameter Setup:

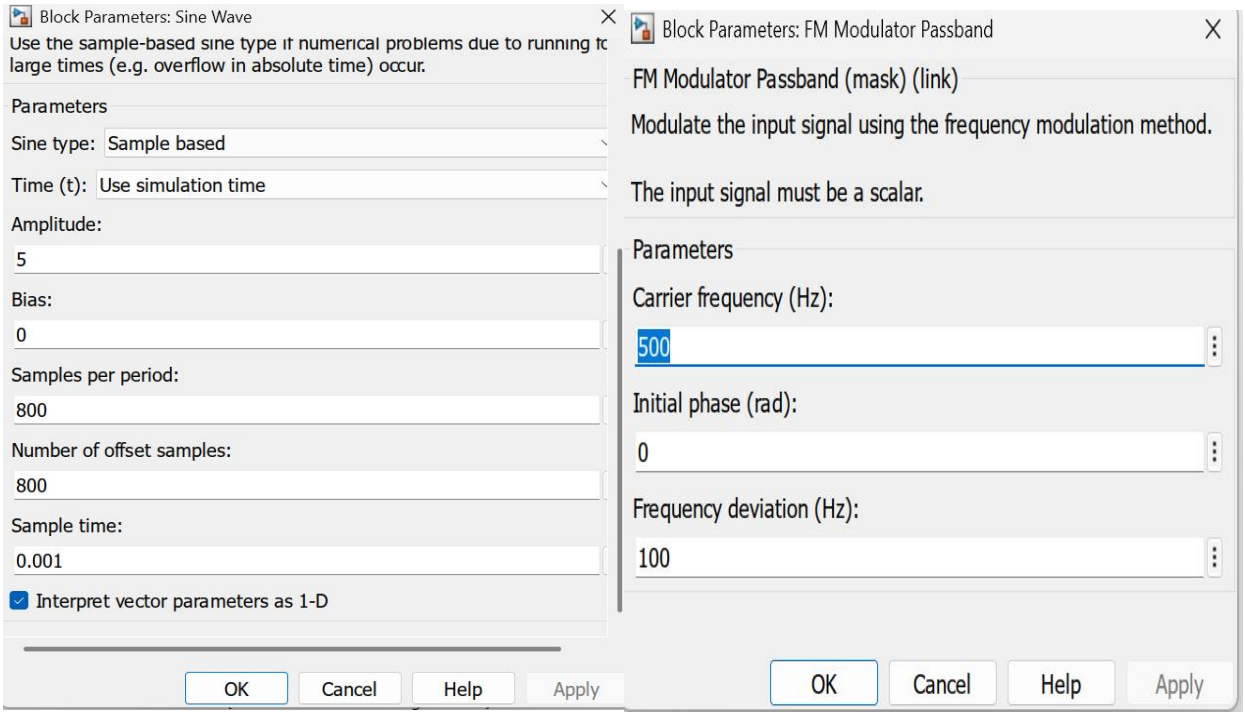

Figure 6: Parameter setting

Output Waveform:

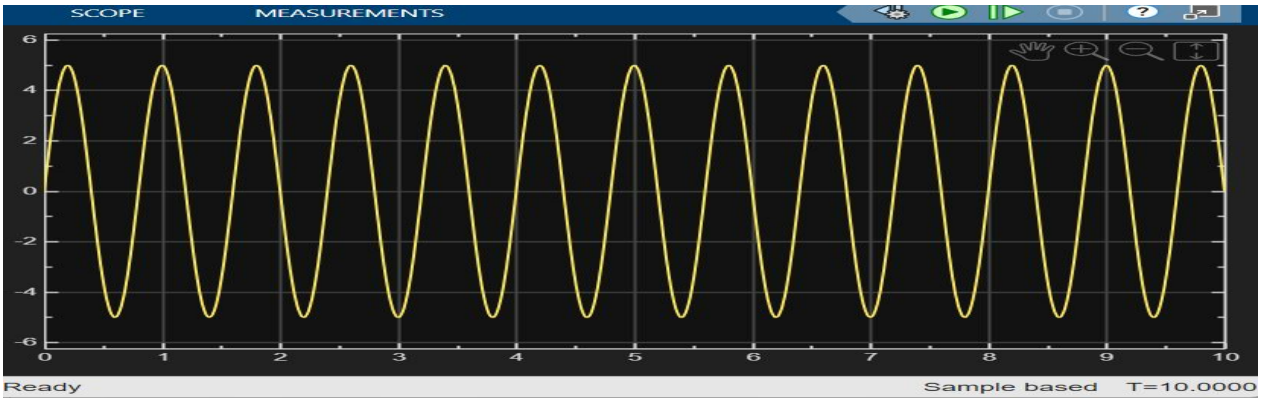

Figure 7: Input Wave

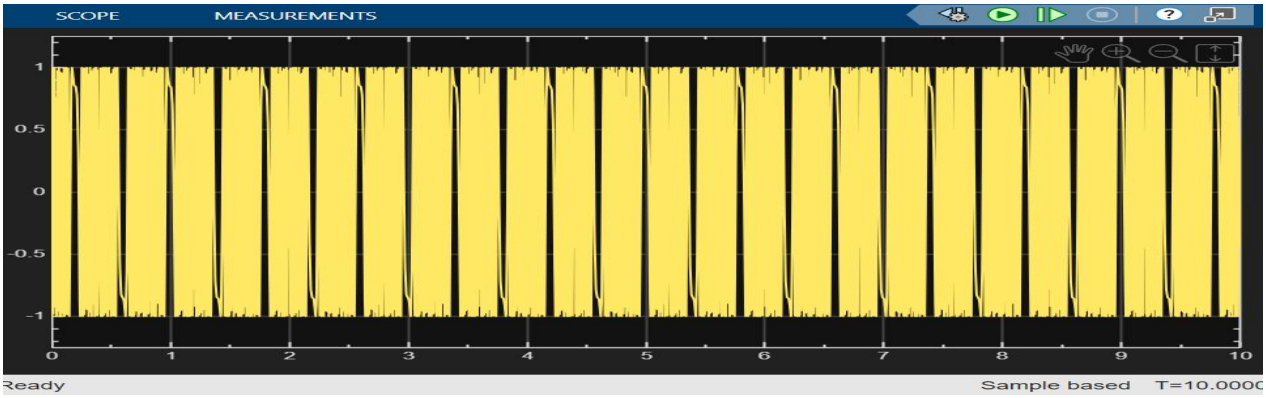

Figure 8: Output Wave

Discussion: This experiment successfully achieved its objective by demonstrating the principles and generation of Frequency Modulation (FM) using the MATLAB environment.Program 1 utilized fundamental trigonometric code to confirm the core definition of FM, showing how the carrier frequency fluctuates directly proportional to the amplitude of the message signal. Program 2 demonstrated a practical, efficient method by modulating a complex two-tone message signal using the built-in fmmod function.The overall analysis, encompassing both coding results and the graphical simulation system, clearly reinforced the concept of frequency deviation. The experiment provided valuable hands-on experience, solidifying the theoretical understanding of frequency modulation through practical implementation on the MATLAB platform.